SpecSeal CID

INSTALLATION INSTRUCTIONS

SpecSeal® Custom Cast-In Place Devices

1

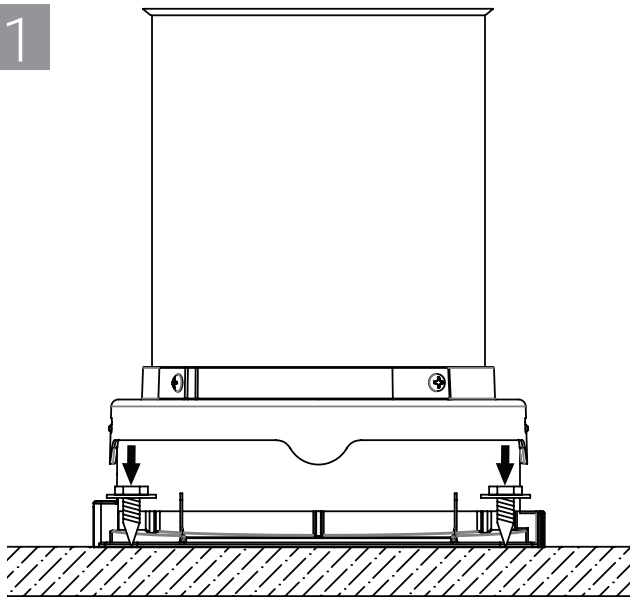

2

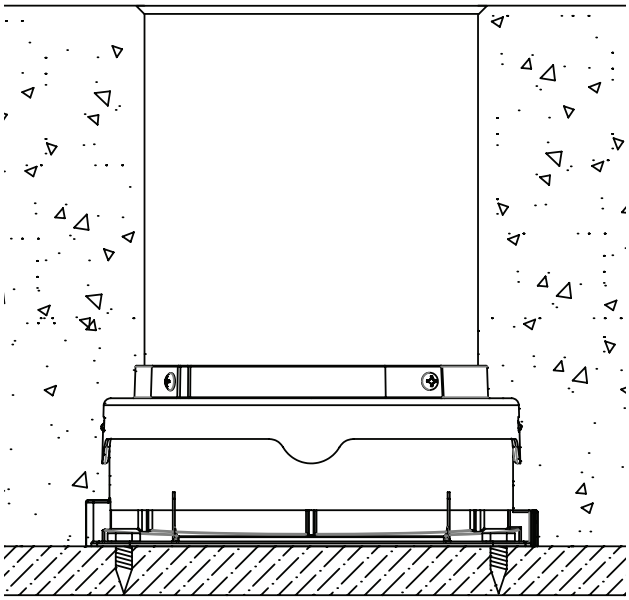

3

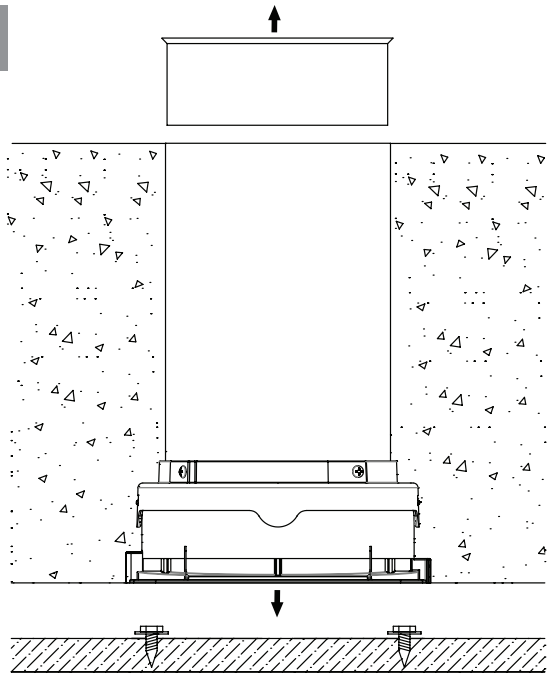

4

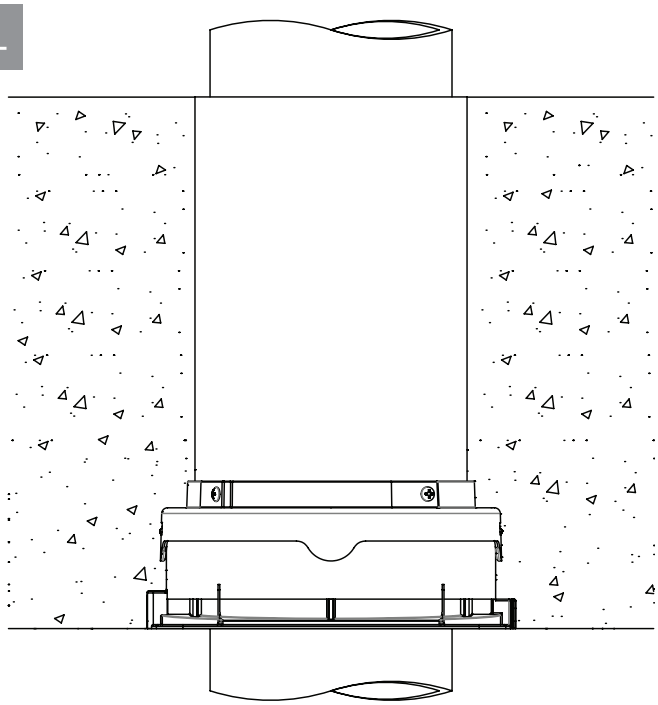

FIRESTOP STI SPECIFIED TECHNOLOGIES INC.

Specified Technologies Inc.
Somerville, NJ 08876 USA
T: (800) 992-1180
F: (908) 526-9623
www.stifirestop.com

IFC MEMBER

Scan for more information

Warranty: www.stifirestop.com/legal/warranty
Made in USA • Printed in USA
ZIS1233 3198