EZ-Path®
FIRE RATED PATHWAY

Installation Sheet
EZP144MBE

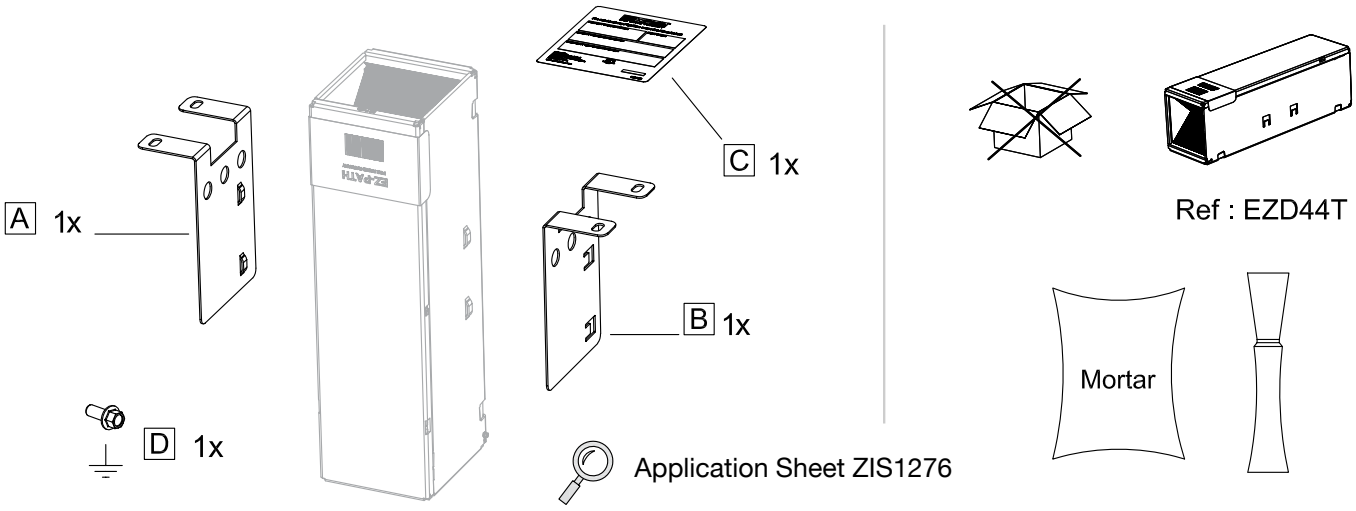

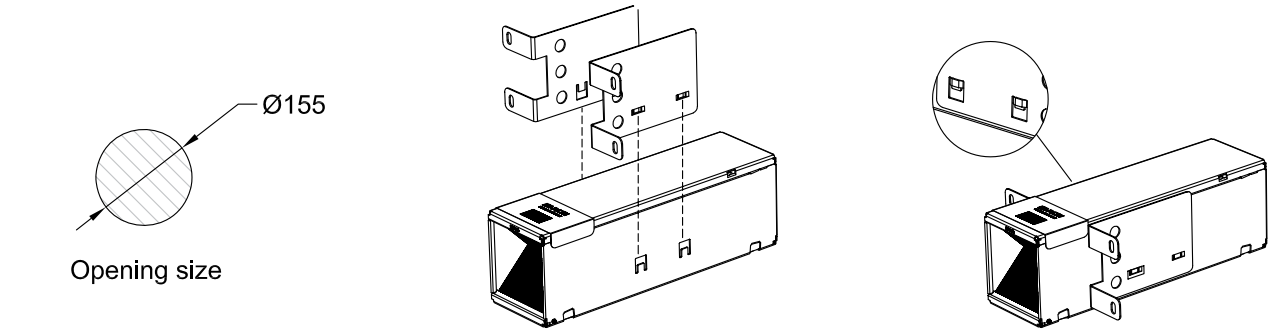

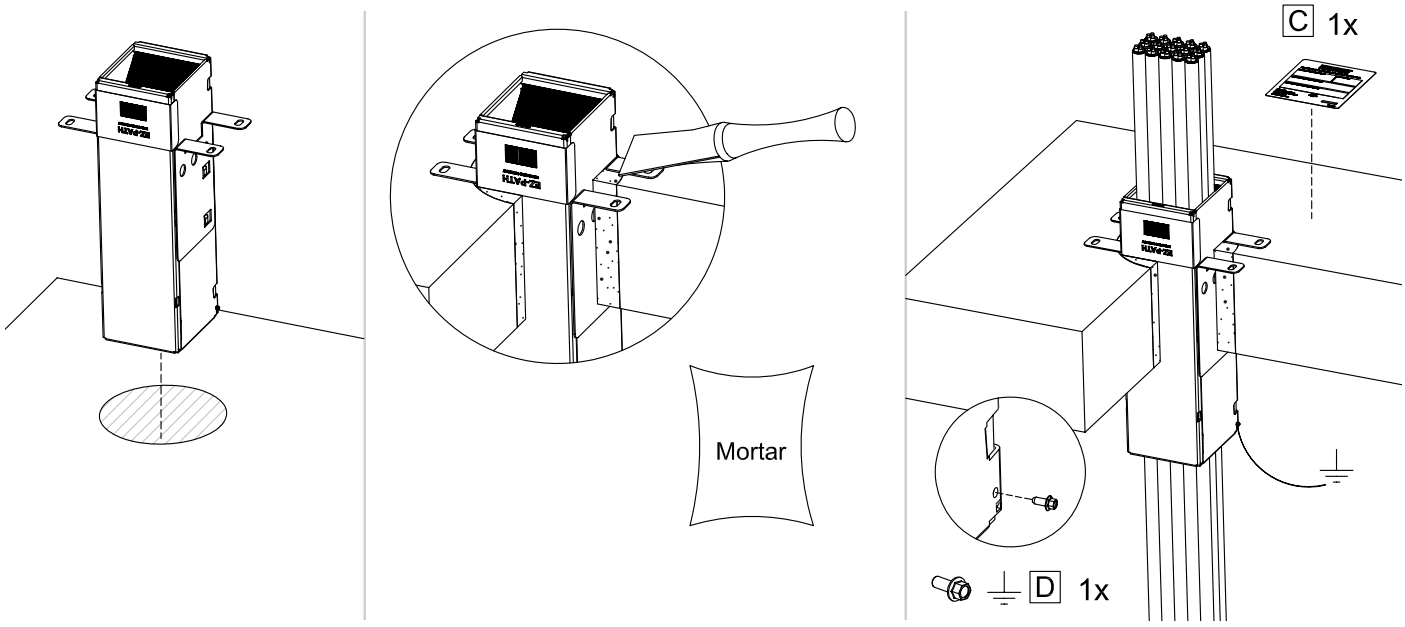

ZIS1271 0389