System No. W-L-3377

ANSI/UL1479 (ASTM E814)	CAN/ULC S115
F Ratings - 1, 2, 3 and 4 Hr (See Items 1 and 3)	F Ratings - 1, 2, 3 and 4 Hr (See Items 1 and 3)
T Rating - 3/4, 1, 1-1/2 and 2 Hr (See Item 3)	FT Rating - 3/4, 1, 1-1/2 and 2 Hr (See Item 3)
L Rating At Ambient - Less than 1 to 7 CFM/Device Module (See Item 2)	FH Ratings - 1, 2, 3 and 4 Hr (See Items 1 and 3)
L Rating At Ambient - Less than 1 to 7 CFM/Device Module (See Item 2)	FTH Rating - 3/4, 1, 1-1/2 and 2 Hr (See Item 3)
	L Rating At Ambient - Less than 1 to 7 CFM/Device Module (See Item 2)
	L Rating at 400 F - Less than 1 to 3 CFM/Device Module (See Item 2)

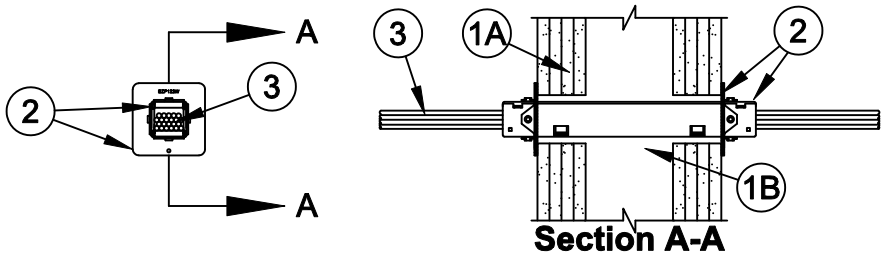

Section A-A

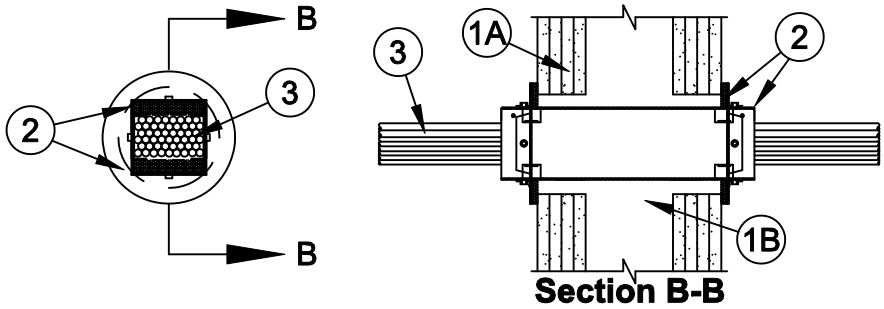

Section B-B

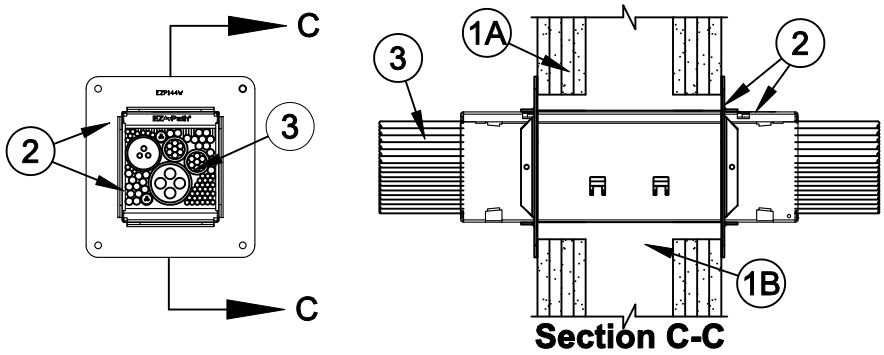

Section C-C

1. **Wall Assembly -** The 1, 2, 3 or 4 hr fire rated gypsum board/stud wall assembly shall be constructed of the materials and in the manner described within the individual U300, U400, V400 or W400 Series Wall or Partition Designs in the UL Fire Resistance Directory and shall incorporate the following construction features:
   A. **Studs -** Wall framing shall consist of either wood studs or steel channel studs. Wood studs to consist of nom 2 by 4 in. (51 by 102 mm) lumber spaced max 16 in. (406 mm) OC. Steel studs to be min 3-1/2 in. (89 mm) wide and spaced max 24 in. (610 mm) OC.
   B. **Gypsum Board* -** Thickness, type, number of layers and fasteners as specified in the individual Wall and Partition Design. See Table for opening sizes.

   The hourly F and FH Ratings are dependent upon the hourly rating of the wall in which it is installed.
2. **Firestop Device* -** Series 22 EZ Path device modules consist of a 1.4 by 1.4 by 10-1/2 in. (36 by 36 by 267 mm) long galv steel tube with an intumescent material lining. Series 33 EZ Path device modules consist of a 3 by 3 by 10-1/2 in. (76 by 76 by 267 mm) long galv steel tube with an intumescent material lining. Series 44+ EZ Path device modules consist of a 4 by 4-5/8 by 14 in. (102 by 118 by 356 mm) long galv steel tube with an intumescent material lining. Firestop device modules to be installed in accordance with the accompanying installation instructions. Firestop device modules secured in place by means of steel wall plates installed with gasketing material supplied with product. Steel wall plates installed on both sides of wall and secured to each device by means of steel screws provided with device. Firestop device module is to be installed with ends projecting an equal distance beyond each surface of the wall assembly. The annular space between the device and opening shall be min 0 in. (point contact) to max 1/8 in. (3 mm) for Series 22 device, max 1/2 in. (13 mm) for Series 33 device and max 1/4 in. (6 mm) for Series 44 device. The opening size and L Ratings for each device vary according to whether device module is blank (no cables) or loaded (with cables) and which cable type and size is used, as tabulated below:

   SPECIFIED TECHNOLOGIES INC - EZ PATH Series 22, 33 or 44+ Fire Rated Pathway

Device	Max Cable Fill	Cable Type	L-Rating (CFM)		Opening Size Diam or Dimensions, in. (mm)
			Ambient	400° F	
Series 22	0%	-	1.4	1.4	2 (51) or 1-3/4 x 1-3/4 (44 x 44)
Series 22	1-25%	3A	Less Than 1	Less Than 1	2 (51) or 1-3/4 x 1-3/4 (44 x 44)
Series 22	26-50%	3A	Less Than 1	Less Than 1	2 (51) or 1-3/4 x 1-3/4 (44 x 44)
Series 22	51-75%	3A	Less Than 1	Less Than 1	2 (51) or 1-3/4 x 1-3/4 (44 x 44)
Series 22	76-100%	3A	Less Than 1	Less Than 1	2 (51) or 1-3/4 x 1-3/4 (44 x 44)
Series 22	100%	3F	Less Than 1	Less Than 1	2 (51) or 1-3/4 x 1-3/4 (44 x 44)
Series 33	0%	-	Less Than 1	Less Than 1	4 (102) or 3-1/4 x 3-1/4 (82 x 82)
Series 33	100%	3A	4	3	4 (102) or 3-1/4 x 3-1/4 (82 x 82)
Series 33	100%	3F	1.3	Less Than 1	4 (102) or 3-1/4 x 3-1/4 (82 x 82)
Series 33	100%	3G, 3H	7	2	4 (102) or 3-1/4 x 3-1/4 (82 x 82)
Series 33	100%	3I	1.8	1.8	4 (102) or 3-1/4 x 3-1/4 (82 x 82)
Series 44+	0%	-	Less Than 1	Less Than 1	6 (152) or 4-1/8 x 4-3/4 (120 x 120)
Series 44+	1-25%	3A-3I	1.5	1.5	6 (152) or 4-1/8 x 4-3/4 (120 x 120)
Series 44+	26-50%	3A-3I	2.3	2.3	6 (152) or 4-1/8 x 4-3/4 (120 x 120)
Series 44+	51-75%	3A-3I	2.3	2.3	6 (152) or 4-1/8 x 4-3/4 (120 x 120)
Series 44+	76%-100%	3A-3I	2.3	2.3	6 (152) or 4-1/8 x 4-3/4 (120 x 120)

2A. **Firestop Device* - Extension Module -** (Optional, Not Shown) - Module attached to ends of Series 33, Series 44+ firestop device (Item 2) to increase its length to facilitate installation in thicker walls. Each module consists of a galv steel tube with an intumescent material lining. Extension module to be installed in accordance with the accompanying installation instructions. When module is used, firestop device (Item 2) and extension module(s) secured in place by means of steel wall plates installed with gasketing material supplied with product. Steel wall plates installed on both sides of wall and secured to each device or extension module(s) by means of steel set screws provided with wall plates. Firestop device and extension module(s) assembly to be installed with ends projecting an equal distance beyond each surface of the wall assembly.

SPECIFIED TECHNOLOGIES INC - EZ PATH Series 33 or Series 44+ Extension

3. **Cables -** Cables may represent a 0 to max 100 percent visual fill within the loading area for the firestop device module. Cables to be rigidly supported on both sides of the wall assembly. Any combination of the following types of cables may be used:

A. Max 400 pair No. 24 AWG (or smaller) copper conductor telecommunication cable with polyvinyl chloride (PVC) or plenum-rated jacketing and insulation.

B. Max 750 kcmil single copper conductor power cable with XLPE jacket and insulation

C. Max 7/C No. 12 AWG copper conductor control cable with PVC or XLPE jacket and insulation.

D. Max 3/C No. 2/0 AWG metal clad or armored cable with steel or aluminum jacket.

E. Max 3/C No. 8 AWG NM cable (Romex) with PVC insulation and jacket.

F. Max four pair No. 22 AWG (or smaller) copper conductor data cable with PVC or plenum rated jacketing and insulation.

G. Coaxial cable with fluorinated ethylene or PVC insulation and jacketing having a max diam of 5/8 in. (16 mm).

H. Optical fiber cable with PVC or polyethylene (PE) jacket and insulation and having a max diam of 5/8 in. (16 mm).

I. Max RG6/U coaxial cable with fluorinated ethylene, polyethylene (PE), PVC or plenum rated jacketing and insulation.

When Series 22 EZ Path device modules are used and when the hourly rating of the wall assembly is 1 hr, the T, FT and FTH Ratings are 3/4 hr except that for Items 3F, 3G and 3H, the T, FT and FTH Ratings are 1 hr. When the hourly fire rating of the wall assembly is 2 hr or greater, the T, FT and FTH Ratings are 3/4 hr when cables are installed. When no cables are installed within the device module, the T, FT and FTH Ratings are 1 hr in 1 hr walls and 1-1/2 hr for 2, 3 and 4 hr walls. When Item 3A, 3B, 3C, 3D or 3E is used, the maximum F and FH Ratings are 2 hr. When max 200 pair No. 24 AWG telecommunication cable and/or 350 kcmil power cable is used or when Item 3F, 3G, 3H or 3I is used, the maximum F and FH Ratings are 4 hr.

When Series 33 EZ Path device modules are used and when the hourly rating of the wall assembly is 1 hr, the T, FT and FTH Ratings are 3/4 hr. When the hourly fire rating of the wall assembly is greater than 1 hr, the T, FT and FTH Ratings are 3/4 hr when Item 3A, 3B, 3C, 3D or 3E is used. Otherwise the T, FT and FTH Ratings are 1 hr. When Item 3A, 3B, 3C, 3D or 3E is used, the maximum F and FH Ratings are 2 hr. When max 200 pair No. 24 AWG telecommunication cable is used or when Item 3F, 3G, 3H or 3I is used, the maximum F and FH Ratings are 4 hr.

When Series 44 + EZ Path device modules are used and when Item 3A, 3B, 3C, 3D or 3E is used, the max F and FH Ratings are 3 hr and the T, FT and FTH Ratings are 1 hr. When Item 3F or 3G is used, the max F and FH Ratings are 4 hr and the T, FT and FTH Ratings are 1-1/2 hr. When Item 3H or 3I is used, the max F and FH Ratings are 4 hr and the T, FT and FTH Ratings are 2 hr. When device empty, the T, FT and FTH Ratings are 1-1/2 Hr.

+Bearing the UL Listing Mark

*** Indicates such products shall bear the UL or cUL Certification Mark for jurisdictions employing the UL or cUL Certification (such as Canada), respectively.**